LoadCONTROLLER / Dual™
by AIR LIFT®

Kits 25852 and 25856

Dual Gauge Analog Compressor Systems

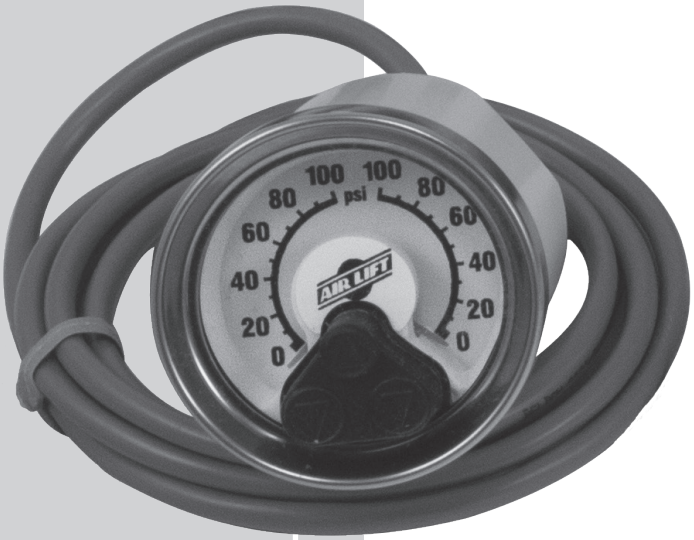

INSTALLATION GUIDE

For maximum effectiveness and safety, please read these instructions completely before proceeding with installation.

Failure to read these instructions can result in an incorrect installation.

MN-746 • (082010) • ECR 8983

TABLE OF CONTENTS

Introduction 2
Important Safety Notice 2
Notation Explanation 2

Installation Diagram 3

Hardware List. 4

Dual Analog Gauge Electrical Schematic 5

Dual Analog Gauge Pneumatic Schematic 6

Dual analog Gauge Mounting Options 7

Installing the Load Controller / Dual System 8
Recommended Compressor Locations 8
Getting Started 8
Step by Step Installation 9
Standard Duty Compressor Mounting 10
Heavy Duty Compressor Mounting 10
Air Line and Power Wires Routing for the Standard Duty Compressor. 10
Air Line and Power Wires Routing for the Heavy Duty Compressor 11

Product Use Information. 13

Limited Warranty and Return Policy 13

Introduction

The purpose of this publication is to assist with the installation of the Load Controller / Dual onboard air management system.

It is important to read and understand the entire installation guide before beginning installation or performing any maintenance, service or repair. The information here includes a hardware list and step-by-step installation information.

Air Lift Company reserves the right to make changes and improvements to its products and publications at any time. Contact Air Lift Company at (800) 248-0892 or visit us online at www.airliftcompany.com for the latest version of this manual.

IMPORTANT SAFETY NOTICE

The installation of this kit does not alter the Gross Vehicle Weight Rating (GVWR) or payload of the vehicle. Check your vehicle's owner's manual and do not exceed the maximum load listed for your vehicle.

Gross Vehicle Weight Rating: The maximum allowable weight of the fully loaded vehicle (including passengers and cargo). This number — along with other weight limits, as well as tire, rim size and inflation pressure data — is shown on the vehicle's Safety Compliance Certification Label.

Payload: The combined, maximum allowable weight of cargo and passengers that the truck is designed to carry. Payload is GVWR minus the Base Curb Weight.

NOTATION EXPLANATION

Hazard notations appear in various locations in this publication. Information which is highlighted by one of these notations must be observed to help minimize risk of personal injury or possible improper installation which may render the vehicle unsafe. Notes are used to help emphasize areas of procedural importance and provide helpful suggestions. The following definitions explain the use of these notations as they appear throughout this guide.

⚠ DANGER INDICATES IMMEDIATE HAZARDS WHICH WILL RESULT IN SEVERE PERSONAL INJURY OR DEATH.

⚠ WARNING INDICATES HAZARDS OR UNSAFE PRACTICES WHICH COULD RESULT IN SEVERE PERSONAL INJURY OR DEATH.

⚠ CAUTION INDICATES HAZARDS OR UNSAFE PRACTICES WHICH COULD RESULT IN DAMAGE TO THE MACHINE OR MINOR PERSONAL INJURY.

NOTE *Indicates a procedure, practice or hint which is important to highlight.*

Installation Diagram

fig. 1

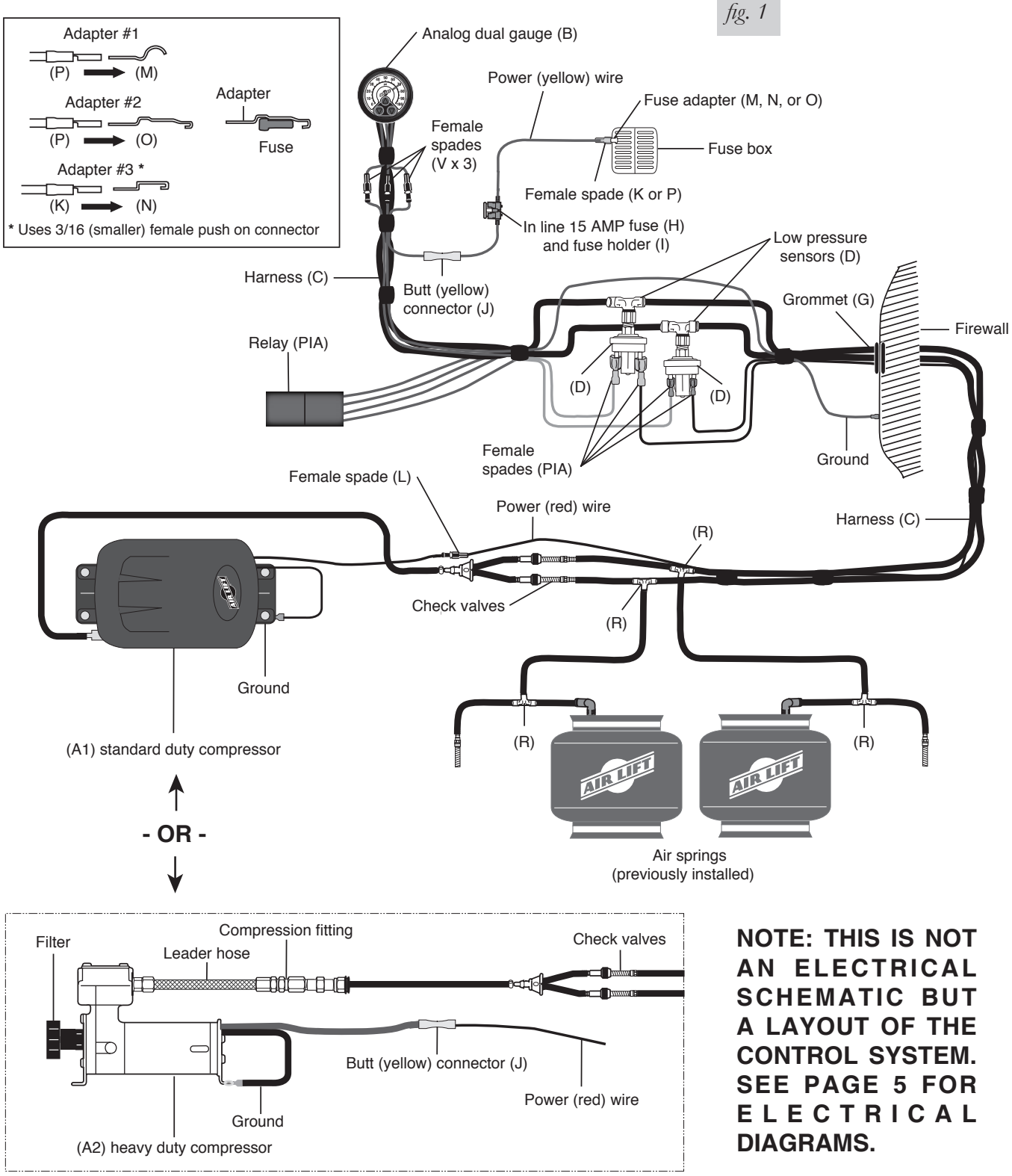

NOTE: THIS IS NOT AN ELECTRICAL SCHEMATIC BUT A LAYOUT OF THE CONTROL SYSTEM. SEE PAGE 5 FOR ELECTRICAL DIAGRAMS.

Hardware List

Item	Part #	Description ..... Qty
A1	16060	Standard Duty Compressor 1
A2	16192	Heavy Duty Compressor.....1
B	25195	Analog Dual Gauge.....1
C	26918	Harness, Dual Analog Gauge 1
D	26042	Sensor, 5 PSI(0.34 Bar).....2
E	20946	1/4" Air Line, “DOT" ..... 50’
F	25196	Gauge Mounting Kit 1
G	10463	Grommet.....1
H	24652	Spade Fuse, 15 Amp (ATC).....1
I	24539	Fuse Holder (ATC/ATO).....1
J	24752	Center Butt, 12-10 GA Shrink Tube 2
K	24524	3/16" Terminal, FSpd 1
L	24595	FSpd Terminal, 12 GA.....1
M	24543	Fuse, AGC Tap In.....1
N	24561	Mini Fuse Adapter.....1
O	24542	ATC/ATO Fuse Tap In 1/4 1
P	24594	1/4" Terminal, FSpd 16 GA 1
Q	10466	8" Zip Tie.....5
R	21838	Tee Union 1/4" X 1/4" PTC 2
S	17441	#8-18X1" Tek Screw.....2
T	26061A	Y-Assembly 1
U	21275	Tee, Hose & Check Valve 2
V	24592	1/4" Terminal, FSpd 16-22 GA.....3

STOP! Missing or damaged parts? Call Air Lift customer service at (800) 248-0892 for a replacement part.

Dual Analog Gauge Electrical Schematic

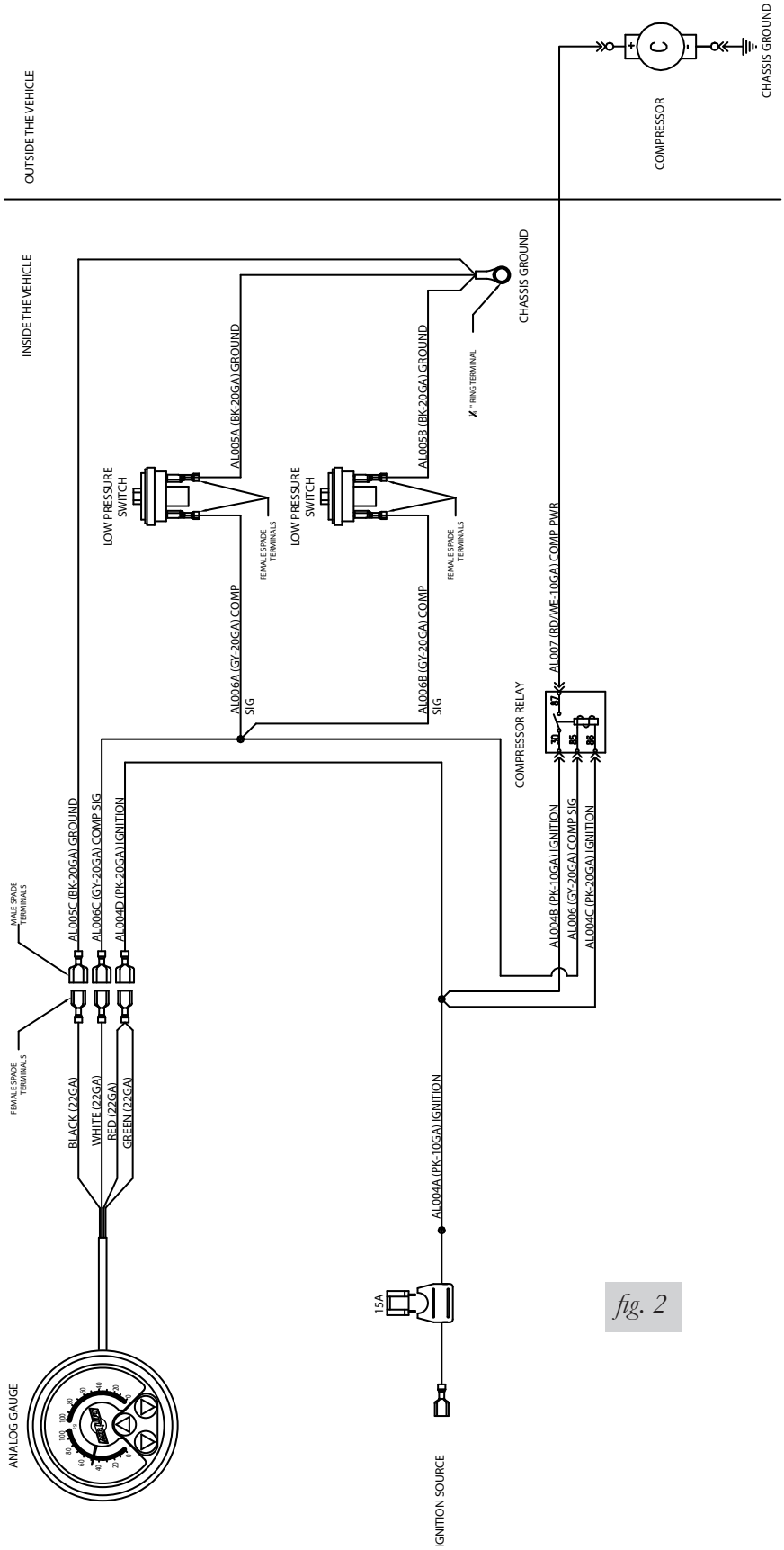

fig. 2

Dual Analog Gauge Pneumatic Schematic

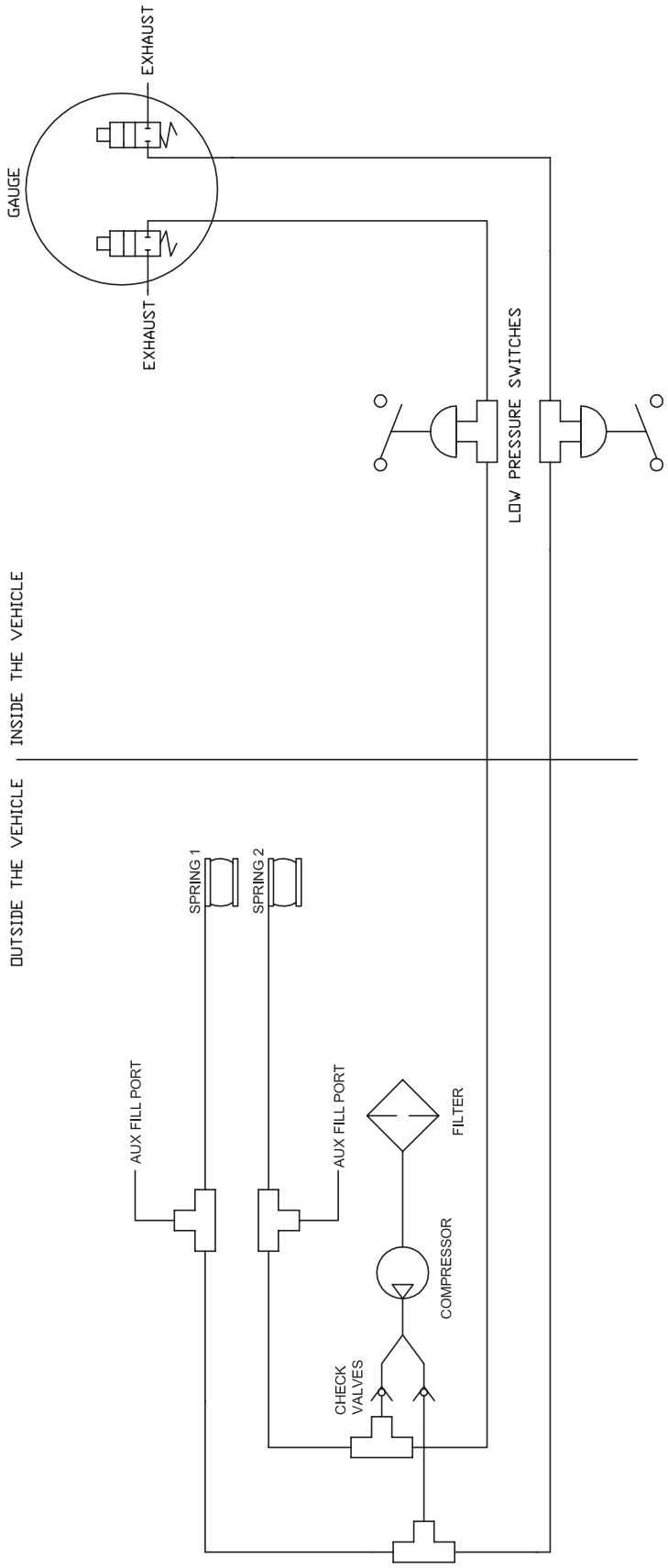

fig. 3

NOTE

Colored tape can serve as an indicator for right and left springs when routing air lines.

Dual Analog Gauge Mounting Options

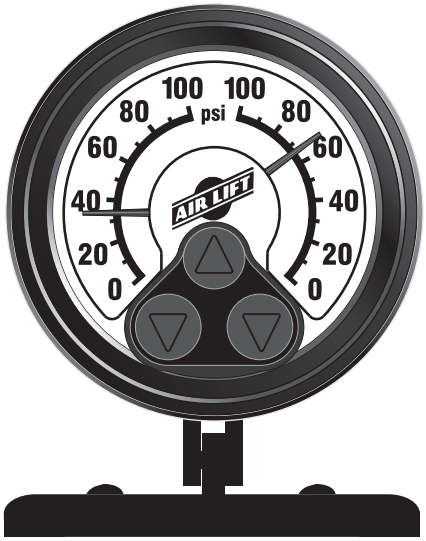

fig. 4

Dual analog gauge mounting hardware on bottom of gauge

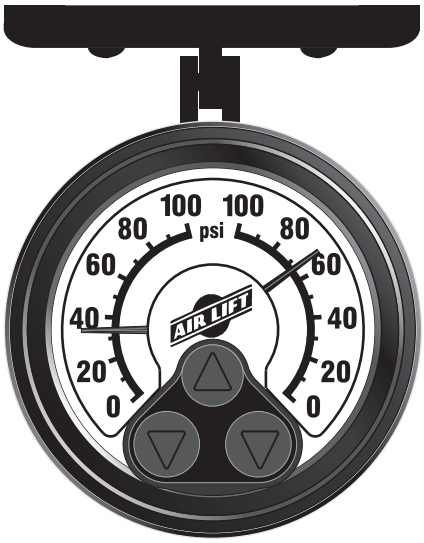

fig. 5

Dual analog gauge mounting hardware on top of gauge

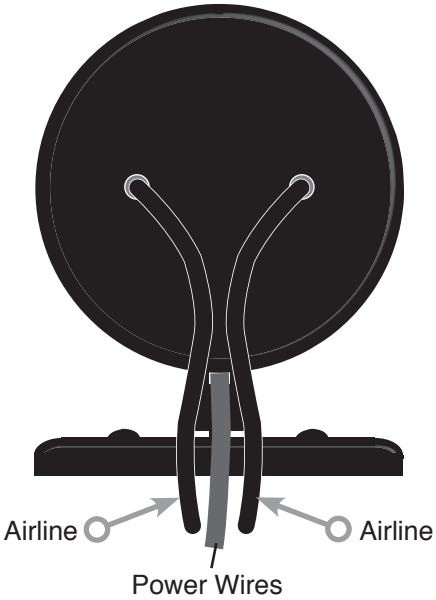

fig. 6

Back of analog gauge

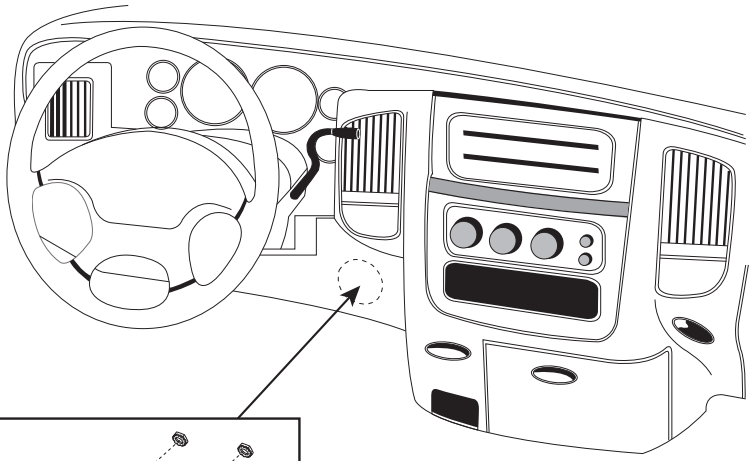

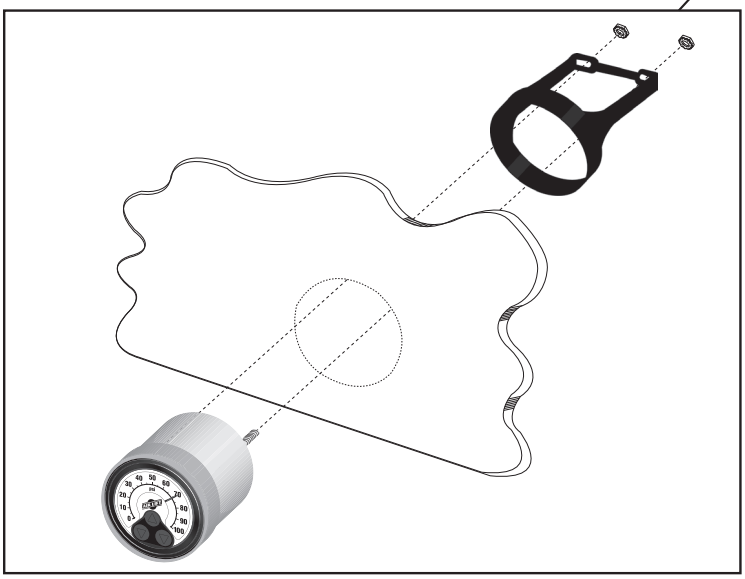

fig. 7 *Optional Dashboard Mounting (Exploded View)*

Installing the Load Controller / Dual System

RECOMMENDED COMPRESSOR LOCATIONS

Important

LOCATE COMPRESSOR IN DRY, PROTECTED AREA ON VEHICLE.
DIRECT SPLASH OR EXCESSIVE MOISTURE CAN DAMAGE
THE COMPRESSOR AND CAUSE SYSTEM FAILURE.

Disclaimer: If you choose to mount the compressor outside the vehicle please keep in mind the compressor body must be shielded from direct splash and the intake should be snorkeled inside the vehicle. If the compressor does not include a remote mount air filter or if mounting the compressor outside the vehicle, make sure to orient the compressor intake filter so that all moisture can easily drain.

Please also remember...

- To avoid high heat environments
- To avoid mounting the compressor under the hood.
- To check to be sure the compressor harness #2 will reach the compressor and connect to harness #1.
- The compressor can be mounted in any position — vertical, upside down, sideways, etc. (please refer to the instruction manual).

GETTING STARTED

This part of the installation should be done after the air spring kit is installed. If you have any questions, please call Air Lift customer service at (800) 248-0892.

If you are adding this control system to an Air Lift LoadLifter 5000™ application, then no modifications to the low pressure sensor are necessary. If you are adding this control system to an Air Lift 1000™ or Ride Control™ application, and if your specific application requires a minimum of 10 PSI, then it will be necessary to adjust the low pressure sensor to 10 PSI To increase the pressure in the low pressure sensor, remove the rubber plug with pliers (fig. 8). Using an allen wrench, turn the screw clockwise 4 1/4 turns (fig. 9). Push the rubber plug back into the top of the low pressure sensor. Proceed with the step by step installation instructions.

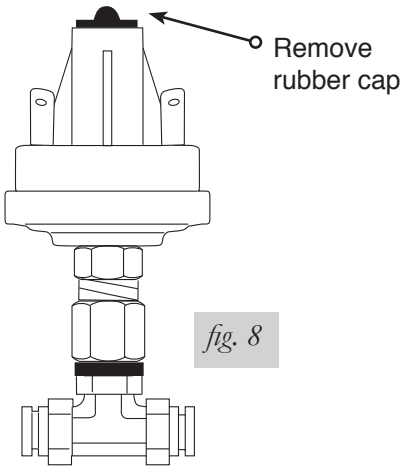

fig. 8

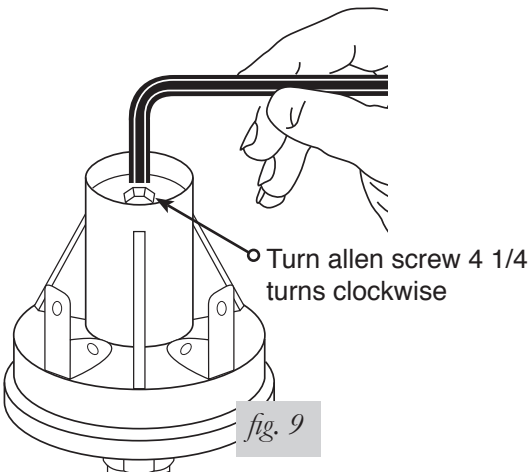

fig. 9

STEP BY STEP INSTALLATION

We recommend that you install the air spring kit first per the instructions provided with the air spring kit.

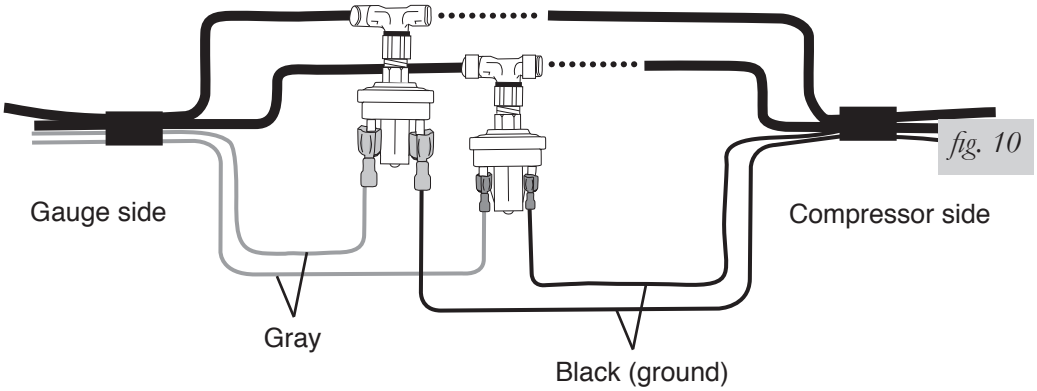

fig. 10

1. Install the gauge pod (figs. 4, 5 & 6). Select a convenient mounting location that has a sturdy rigid surface. The bottom edge of the dash on either side of the steering wheel is a good location. Attach the gauge pod to the selected location with the black self-tapping screws.

NOTE *Optional dash mounting bracket and hardware also included (fig. 7).*

2. Connect the harness to the gauge pod.
   a. Connect the color coded wires to the gauge harness as shown in the attached schematic (fig. 2).
   b. Connect the low pressure switch assemblies as shown in the attached schematic (fig. 2).
   c. Do not connect the power wire at this time.
   d. The wiring harness also connects the gauge pod to the low pressure sensor assembly. The low pressure sensor protects the air springs from failure resulting from low pressure in the unloaded condition. This sensor is preset to maintain a MINIMUM pressure of 5 PSI in the air springs unless the setting was changed in the “Getting Started" section. The sensor measures the pressure in each spring and turns on the compressor if the pressure falls below the set PSI.
   e. Screw ground eyelet to firewall or other electrical ground in the cab.

NOTE *The sensor should be located under the dash inside the vehicle and secured with the provided tie straps.*

3. Install the compressor unit.
   a. Hold the compressor in the recommended location (fig. 11 or 12).
   b. For box frames: In some cases the frame section will not be wide enough to mount the compressor legs flat to the rail. Refer to figs. 11 and 12 in this situation.

⚠ CAUTION DO NOT DRILL ANY HOLES INTO THE FRAME OR THE FLOOR BOARD BEFORE CHECKING FOR HYDRAULIC LINES, GAS LINES, AND/OR ELECTRICAL WIRES THAT MAY NEED TO BE MOVED ASIDE. ALSO, WHEN ATTACHING TO THE FLOOR BOARD, IT IS IMPORTANT TO CHECK WHERE THE SCREWS PROTRUDE THROUGH THE FLOOR BOARD. IT MAY BE NECESSARY TO TRIM OR COVER THE TOP OF THE SCREWS INSIDE THE VEHICLE. A SEALER SHOULD BE USED AROUND THE SCREW TO PREVENT THE ELEMENTS FROM ENTERING THE CAB AREA.

STANDARD DUTY COMPRESSOR MOUNTING (FIG. 1 - A1, 11)

NOTE *In some cases the mounting area does not provide enough room to use a drill to drive in the screws. It may be necessary to use the mounting brackets as a template to drill 13/64" holes through the frame first and then use a 7/16" nut driver to install the self tapping screws.*

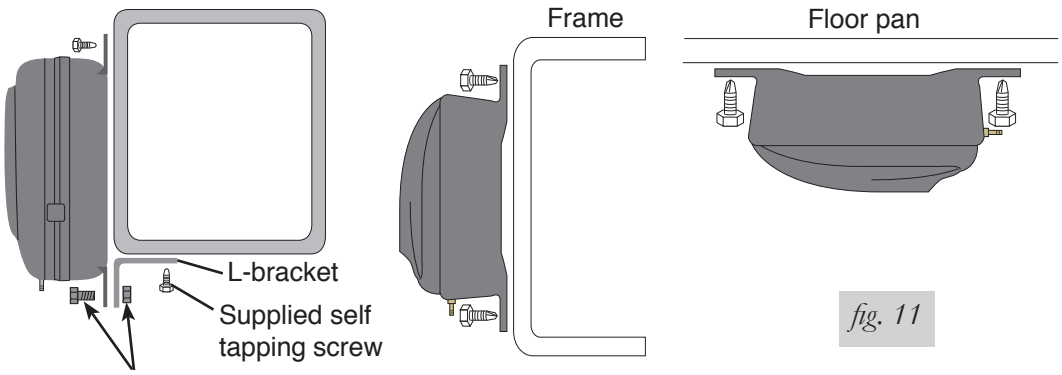

fig. 11

1/4" Bolt and nut will need to be provided if the L-bracket is fabricated. The L bracket is shown as an optional mounting method and is not supplied.

HEAVY DUTY COMPRESSOR MOUNTING (FIG. 1 - A2, 12)

NOTE *Using the compressor as a template, drill holes and mount the compressor using the black mounting hardware that comes in the box containing the compressor.*

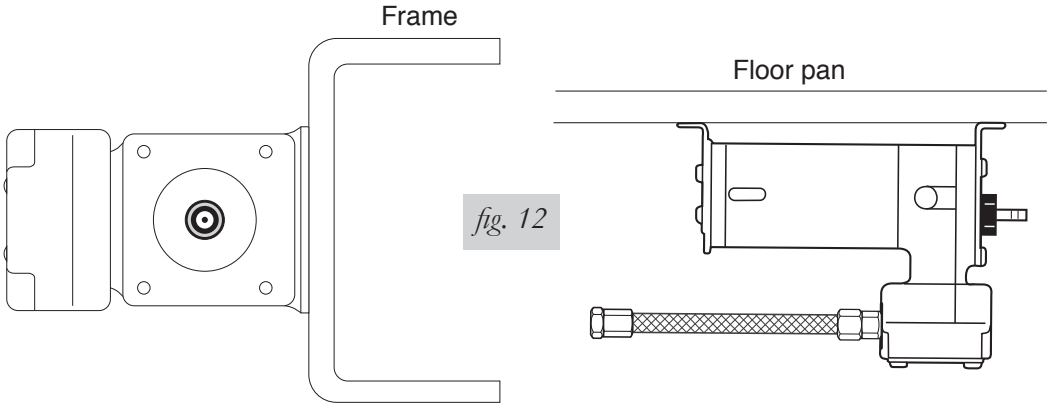

fig. 12

NOTE *Attach the compressor ground wire to one of the mounting screws (fig. 1).*

AIR LINE AND POWER WIRES ROUTING FOR THE STANDARD DUTY COMPRESSOR:

1. Push the air line onto the barb fitting on the compressor. Make sure the air line covers all barbs. A small amount of water or lubricant and pushing with a slight circular motion will ease installation (fig. 13).

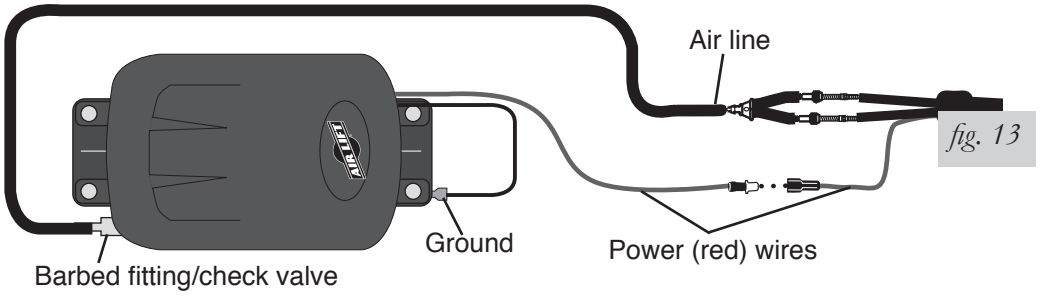

fig. 13

AIR LINE AND POWER WIRE ROUTING FOR THE HEAVY DUTY COMPRESSOR:

1. Remove the nut from the leader line and install over air line from check valve assembly.
2. Push the air line from the check valve assembly into the barbed fitting on the compressor leader line.
3. Slide the nut over the fitting and tighten securely (fig. 14).

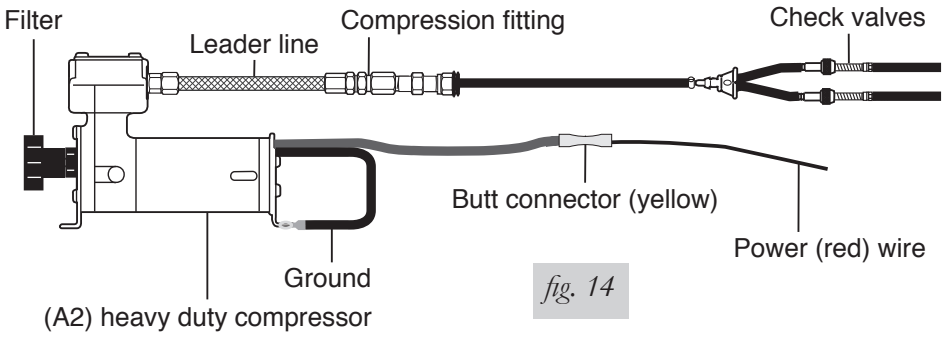

fig. 14

4. Route the harness to the compressor.
   a. Use existing grommets in the floorboard or firewall to route the harness from the cab to the frame mounted compressor.
   b. In some cases, a hole may have to be drilled to allow access for the harness. Drill a 1" diameter hole and install the provided grommet (fig. 15). It will be necessary to seal any grommets or holes that have been cut, drilled or removed so as not to allow elements to enter the cab area of the vehicle.

After the hole is drilled and before you route the harness to through the firewall, insert the grommet and "walk" the material around the inside edge of the drilled hole. You may have to trim the grommet to get an exact fit.

(The flexible grommet is in the sealed parts package.)

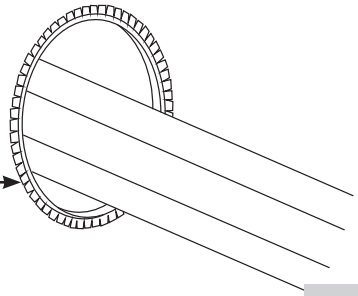

fig. 15

   c. When routing the wiring harness, it should not be routed so as to lay on, or near, the exhaust pipe/muffler/catalytic convertor of the vehicle. Routing along the top of a crossmember or over a heat shield is recommended.
5. The next connection is between each air spring and the air line "T" fitting.
   a. With the air springs deflated, use a hose cutter to cut the air line already installed between the air springs and the inflation valves.
   b. Install the provided "T" fittings (fig. 1) by pushing the air line into each leg of the "T" until you feel a definite "click". Each line should go in 9/16".
   c. Connect a single length of air line to the open leg of the "T". Connect as shown in the pneumatic schematic.
   d. Route the air line across the chassis from the far side over the exhaust system heat shields and along the frame up to the compressor. Avoid heat sources, sharp edges, and tight bends.

e. Route air lines into cab from “T” fitting and attach to pressure switch assembly as shown in the pneumatic schematic (figs. 3 and 10).

f. Route air lines from low pressure switch to gauge barb.

g. Press air line over gauge barb. Water or lube may assist in securing air lines over the barb. A circular motion will assist in installation.

6. Connect the power wire to fused ignition.

a. Route it to the vehicle fuse box.

b. Determine which open terminal (accessory, etc.) works only when the key is in the “on” or accessory position (or refer to the owners manual for an available accessory fuse). The terminal should have an amperage rating higher than the 15 amp in-line fuse.

c. Connection to the fuse terminal will depend on what type of fuse your vehicle uses. If your vehicle uses the barrel type fuse, use adapter #1. If you have the standard spade type fuses, use adapter #2. Many late model vehicles use a smaller spade type fuse which requires adapter #3 (fig. 16). If you use adapter #1 or #2 you will need to crimp on a 1/4" (14-16GA) female connector supplied in kit. If you use adapter #3 you will need to crimp on 3/16" (14-16GA) female connector supplied in kit.

NOTE *The harness comes with blunt cut wire so no cut-off is necessary. Just crimp the wire right to the connector.*

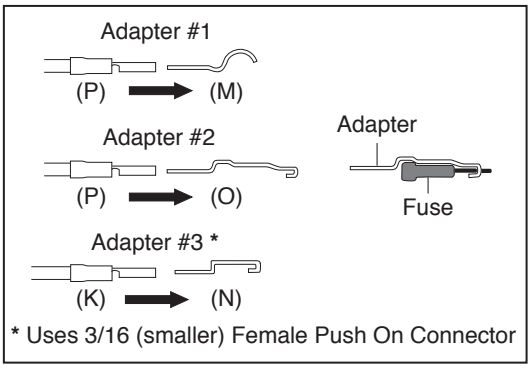

fig. 16

NOTE *Connect adapter to “HOT” side of the fuse. With the ignition on, the compressor will turn on and fill the system to 10 PSI (0.69BAR) before shutting off.*

7. Press the off/on button to inflate both air springs and use the small deflate button to adjust the pressure. Inflate to 30 PSI/2.07BAR (20 PSI/1.4BAR for Air Lift 1000 kits). Check all fittings and inflation valve cores with a solution of 1/5 dish soap to 4/5 water in a spray bottle for leaks.

IMPORTANT: If the compressor runs continually or often, then there is a leak. Disconnect the compressor at the fuse box and test for leaks with a soapy water solution.

⚠ CAUTION NEVER RUN THE COMPRESSOR LONGER THAN FOUR MINUTES CONTINUOUSLY. ALLOW AT LEAST FIVE MINUTES FOR COOL DOWN BEFORE STARTING THE COMPRESSOR AGAIN.

Product Use Information

Please refer to the User Guide that came with your load support kit for answers to frequently asked questions and details for adjusting air pressure.

Limited Warranty and Return Policy

Air Lift Company provides a limited lifetime warranty to the original purchaser of its load support products, that the products will be free from defects in workmanship and materials when used on cars and trucks as specified by Air Lift Company and under normal operating conditions, subject to the requirements and exclusions set forth in the full Limited Warranty and Return Policy that is available at www.airliftcompany.com/warranty.

For additional warranty information contact Air Lift Company customer service.

Need Help?

Contact our customer service department by calling (800) 248-0892, Monday through Friday. For calls from outside the USA or Canada, our local number is (517) 322-2144.

Register your warranty online at www.airliftcompany.com/warranty

Thank you for purchasing Air Lift products — the professional installer's choice!

Air Lift Company • 2727 Snow Road • Lansing, MI 48917 or PO Box 80167 • Lansing, MI 48908-0167
Toll Free (800) 248-0892 • Local (517) 322-2144 • Fax (517) 322-0240 • www.airliftcompany.com

MADE IN USA WITH GLOBAL COMPONENTS

Printed in the USA
JJC-1020

California: ⚠WARNING: Cancer and Reproductive Harm – www.P65Warnings.ca.gov